NAME OF WORK:- ESTIMATE FOR ELECTRICAL WORK OF (MODEL-G) 4 NOS AND URINAL- 5 NOS SEATED TOILET ATMALLICKBAG HIGH SCHOOL-I, WARD No.-3 , WITHIN HALISAHAR MUNICIPALITY.

*** As per PWD & I & WD schedule district charges will be applicable on PWD & I & WD schedule items**

*** No district charges will be applicable on non-schedule items**

Sl No.	Iteam Description	Unit	Quantity	Rate	Amount
1	Distribution wiring in 2 x 22/0.3 (1.5 sqmm) single core stranded 'FR' PVC insulated & unsheathed copper wire(Brand approved by EIC) in 20mm size PVC rigid conduit 'FR' (Precision make), with 1x22/0.3 (1.5 sqmm) single core stranded 'FR' PVC insulated & unsheathed copper wire for ECC, to light/fan/call bell points with Piano Key type switchfixed on MS CRC sheet metal (16 SWG) switch board cum JB on wall complete with 2 no. suitable size "Ph & N" copper bar incl. bakelite/Perspex (wall matching color) top cover 3 mm thick and incl. 175mmx100mmx65mm inspection box, making earthing attachment, painting the MS box and mending good the damages to original finish. [PWD Schedule Page No-E-14 Iteam No-2a] Average run 5 mtr	Point	14	612.00	8568.00
2	Distribution wiring in 1.1 KV grade 22/0.3 (1.5 sqmm) single core stranded 'FR' PVC insulated & unsheathed copper wire (Brand approved by EIC) in 20mm size PVC rigid conduit 'FR' (Precision make), with 1.1 KV grade 1 x 22/0.3 (1.5 sqmm) single core stranded 'FR' PVC insulated & unsheathed copper wire as ECC, to 5A 3 pin flush type plug socket & Piano Key type switch fixed on MS CRC sheet metal (16 SWG) switch board cum JB on wall incl. bakelite/Perspex (wall matching color) top cover 3 mm thick and incl. painting the MS box and mending good the damages to original finish On Board (only for pay counter) [PWD Schedule Page No-E-15; I-4a]	Nos	1	67.00	67.00

3	Supplying and fixing 240V 32A Double Pole AC Type 30mA RCCB.(Complete Set) (ISI marked) [Make- Legrand] (Cat No 4113/95) [Legrand Page No-92]	Nos	1	5942.00	5942.00
4	Distribution wiring in 1.1 KV single core stranded 'FR' PVC insulated & unsheathed copper wire (Brand approved by EIC) in 20mm size PVC rigid conduit 'FR' (Precision make) incl. necy. fittings as required 2 x 36/0.3 (2.5 sqmm) + 1 x 22/0.3 (1.5 sqmm) ECC [PWD Schedule Page No-E-14 Iteam No-1a(ii)]	mtr	10	119.00	1190.00
5	Supplying and fixing double-door SPN MCB Distribution Board with IP-42/43 protection, concealed in wall after cutting the wall & mending good the damages to original finish incl. Inter connection with suitable size of copper wire and neutral link & provision for earthing attachment. a) For (2+4 way) (**Make -Havells**) [PWD Schedule Page No-D-9;Iteam No-13]	Nos	1	935.00	935.00
6	Supplying and fixing 240/415 V MCB of Breaking capacity 10kA & C characteristics on din rail of existing DBs and necessary connection 6-32A SP MCB (**Make -Havells**) [PWD Schedule Page No-D-6;Iteam No-7	Nos	4	168.00	672.00
7	Supplying and fixing 240/415 V MCB Isolator on din rail of existing DBs and necessary connection. 40A DP MCB Isolator (**Make -Havells**) [PWD Schedule Page No-D-5;Iteam No-6]	Nos	1	208.00	208.00
8	Supply of TMC501 conventional industrial batten **Philips LED Tube**,model no-TMC501 P1xT-LED 22W P3241 (**WB I & WD schedule P-113, I- 5:3 F.22**)	Nos	3	451.00	1353.00

9	Fixing only single/twin fluroscent light fitting complete with all accessories directly on wall/ceiling by screws etc.. **[PWD Schedule Page No-C-2;Iteam No-14a]**	Nos	3	86.00	258.00
10	Supply & fixing Bulk head light fittings with die cast aluminium housing frosted/clear glass on wall/ceiling incl S/F 9 watt LED Lamp complete set. [Make - Havells] **(PWD sch - Page--D-13, I-23)**	Nos	6	569+ District Charges+75= 644.00	3864.00
11	Supply & fixing smart bright street light complete with all accessories to be fixed from the wall of building or on pole incl. making holes /providing clamping arrangement & necy. GI reducer as required.S&F 40 mm GI Pipe 1.5 mtr average length & s&f necy length of 1.5 sqmm pvc insulated single core copper wire & making connections as required & mending good damages incl wall paingting. (30 Watt) (Make - Bajaj) **[WB I&WD sch P-111 , I-f.9.0.2]**	Nos	1	3016.00	3016.00
12	Supply of 12" domestic metal exhaust fan 230V 50 Hz (Model- Trans Air 9" Grey) **(Make-Crompton/Havells/Bajaj)** **(UD & MA schedule P-14, I-5))**	Nos	3	1863.00	5589.00
13	Fixing only exhaust fan after making hole in wall and making good damages and smooth cement finish etc. as practicable as possible and providing necy. length of PVC insulated wire and making connection for exhaust of following diameter: (9") **[PWD Schedule Page No-C-4;Iteam No-28(b)]**	Nos	3	247.00	741.00
14	Fixing only louver shutter/cowl on wall with necy. bolts & nuts (6 mm dia x 62 mm long) For 22.5 cm(9") Exhaust fan **[PWD Schedule Page No-C-4;Iteam No-28(b)]**	Nos	3	82.00	246.00

15	S/F 240V 25A Modular type starter (brand approved by EIC)with 25 A. Modular switch DP MCB (C-Curve)and 4 Module G.I. Moduar type switch board with 4 Module Top Cover Plate flushed in wall incl. S/F switch board and Cover Plate and making necy. Connections with PVC Copper wire and earth connectivity wire etc. as per schedule **[for Pump]** **[PWD Schedule Page No-E-19, Item No-17] (Please follow in details)**	Nos	1	784.00	784.00
16	Supply and Fixing of 2 mm Polyvinyl glow sign board made of 22 SWG GI sheet box with 1"X1" aluminum channel for fixing the vinyl board after necessary cutting the letter as required & s\f LED tube light fittings along with all accessories. (16 sqft @495.00/sqft) **(UD & MA schedule P-14, I-4)**	Nos	1	7920.00	7920.00
17	Earthing installation by GI earth Spike (1830 X 20 mm) including 8SWG GI EarthWire & GI nuts, bolts, washer etc.	Nos	1	450.00	450.00
			Total		41803.00
			Add 18% GST		7524.54
			Total With GST (A)		49327.54
			Cess@1%		493.28
			total		49820.82
	Contingency Amount on "A"		Contingency@3%		~~1494.62~~ 1479.82
	(Total+GST)=Rs:		**Total**		~~51315.44~~ 51300.64
				Say Rs.	~~51315.00~~ 51301.00

Say Rs. 51,301.00

Samrat Ateoge
Sub-Assistant Engineer
Halisahar Municipality

Assistant Engineer
Halisahar Municipality

Chairman
Halisahar Municipality

31.01.25
Junior Engineer
Electrical & Mechanical Division
SUDA

OFFICE OF THE BOARD OF COUNCILLORS * HALISAHAR MUNICIPALITY, 24 PGS. (N)

Technically Vetted Rs.: 51,301=00.
(Rupees Fifty One thousand, three hundred One Only.

30.1.25
ASSISTANT ENGINEER
ELECTRICAL & MECHANICAL DIVISION
SUDA

31/1/25
Executive Engineer (E/M)
O/O the Secretary M.E. Dte.
Government of West Bengal

HALISAHAR MUNICIPALITY

PROPOSED COMMUNITY TOILET AT MALLICKBAG HIGH SCHOOL-I WARD NO. 03 WITHIN HALISAHAR MUNICIPALITY.

(Toilet Seats- 4 Nos, Urinal 5 Nos ,MODEL No.- G)

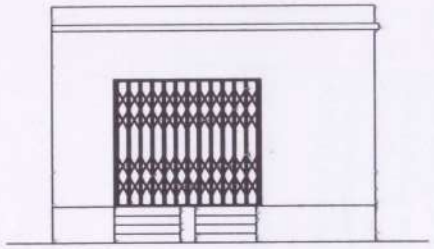

FRONT ELEVATION

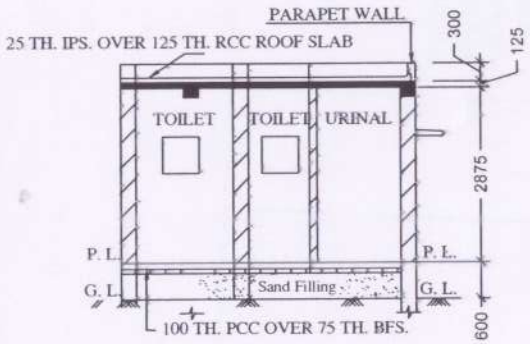

SECTION - `A - A'

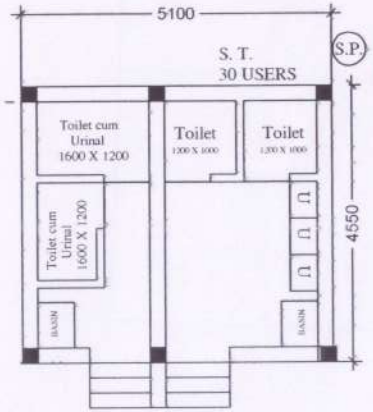

PLAN

BHLP → 06
TL → 03
EF → 03
OL → 01
GSB → 01
14 pts

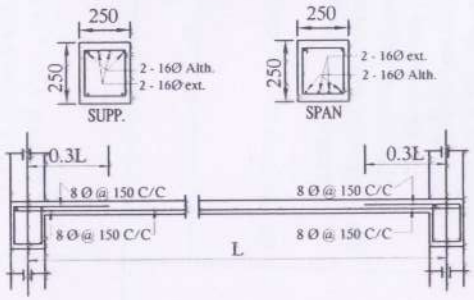

Details Of R.C.C Roof Slab & Beam

(SCALE - 1 : 25)

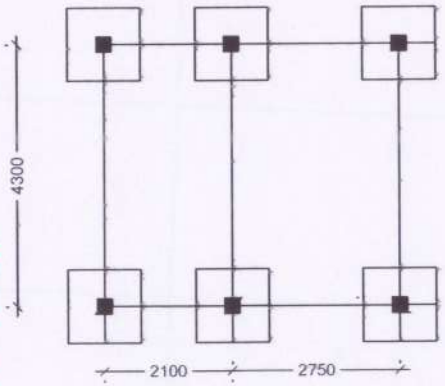

LAYOUT PLAN

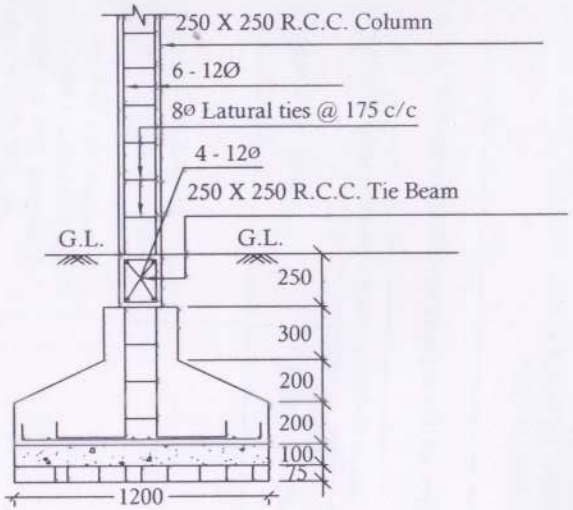

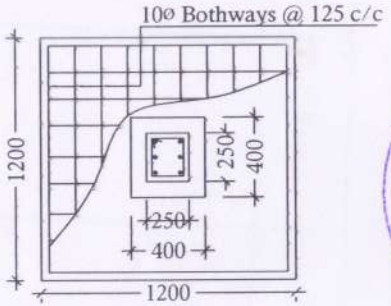

DETAILS OF R. C. C COLUMN

(SCALE - 1 : 25)

OFFICE OF THE BOARD OF COUNCILLORS HALISAHAR MUNICIPALITY

Samrat Neogi
Sub-Assistant Engineer
Halisahar Municipality

Assistant Engineer
Halisahar Municipality

Chairman
Halisahar Municipality