NAME OF WORK:- ESTIMATE FOR ELECTRICAL WORK OF 4 SEATED NETAJI SPORTING CLUB PUBLIC TOILET AT Beldanga, Majhpara, Nejati Sporting Club, WARD NO. - 9 UNDER BELDANGA MUNICIPALITY OF WEST BENGAL

Model No- G (PROP-00922) * District Charges 5% Added

[ASPIRATIONAL PARAMETER]

* As per PWD & I & WD schedule district charges will be applicable on PWD & I & WD schedule items

* No district charges will be applicable on non-schedule items

Sl No.	Iteam Description	Unit	Quantity	Rate	Amount	Remarks
1	Distribution wiring in 2 x 22/0.3 (1.5 sqmm) single core stranded 'FR' PVC insulated & unsheathed copper wire(Brand approved by EIC) in 20mm size PVC rigid conduit 'FR' (**Precision make**), with 1x22/0.3 (1.5 sqmm) single core stranded 'FR' PVC insulated & unsheathed copper wire for ECC, to light/fan/call bell points with Piano Key type switchfixed on MS CRC sheet metal (16 SWG) switch board cum JB on wall complete with 2 no. suitable size "Ph & N" copper bar incl. bakelite/Perspex (wall matching color) top cover 3 mm thick and incl. 175mmx100mmx65mm inspection box, making earthing attachment, painting the MS box and mending good the damages to original finish. [PWD Schedule Page No-E-14 Iteam No-2a] Average run 5 mtr	Point	~~12~~ 17	642.60	~~7711.20~~ 10924.20	ADD DISTRICT CHARGES
2	Distribution wiring in 1.1 KV grade 22/0.3 (1.5 sqmm) single core stranded 'FR' PVC insulated & unsheathed copper wire (Brand approved by EIC) in 20mm size PVC rigid conduit 'FR' (**Precision make**), with 1.1 KV grade 1 x 22/0.3 (1.5 sqmm) single core stranded 'FR' PVC insulated & unsheathed copper wire as ECC, to 5A 3 pin flush type plug socket & Piano Key type switch fixed on MS CRC sheet metal (16 SWG) switch board cum JB on wall incl. bakelite/Perspex (wall matching color) top cover 3 mm thick and incl. painting the MS box and mending good the damages to original finish **On Board (only for pay counter)** **[PWD Schedule Page No-E-15; I-4a]**	Point	2	70.35	140.70	ADD DISTRICT CHARGES
3	Supplying and fixing 240V 32A Double Pole AC Type 30mA RCCB.(Complete Set) (ISI marked) **[Make-Legrand]** (Cat No 4113/95) **[Legrand Page No-92]**	Nos	1	5942.00	5942.00	NO DISTRICT CHARGES
4	Distribution wiring in 1.1 KV single core stranded 'FR' PVC insulated & unsheathed copper wire (Brand approved by EIC) in 20mm size PVC rigid conduit 'FR' (**Precision make**) incl. necy. fittings as required 2 x 36/0.3 (2.5 sqmm) + 1 x 22/0.3 (1.5 sqmm) ECC **[PWD Schedule Page No-E-14 Iteam No-1a(ii)]**	mtr	17	124.95	2124.15	ADD DISTRICT CHARGES
5	Supplying and fixing double-door SPN MCB Distribution Board with IP-42/43 protection, concealed in wall after cutting the wall & mending good the damages to original finish incl. Inter connection with suitable size of copper wire and neutral link & provision for earthing attachment. **a) For (2+4 way) (Make -Havells)** **[PWD Schedule Page No-D-9;Iteam No-13]**	No	1	981.75	981.75	ADD DISTRICT CHARGES

6	Supplying and fixing 240/415 V MCB of Breaking capacity 10kA & C characteristics on din rail of existing DBs and necessary connection 6-32A SP MCB (**Make -Havells**) **[PWD Schedule Page No-D-6;Iteam No-7]**	Nos	4	176.40	705.60	ADD DISTRICT CHARGES
7	Supplying and fixing 240/415 V MCB Isolator on din rail of existing DBs and necessary connection. 40A DP MCB Isolator **(Make -Havells)** **[PWD Schedule Page No-D-5;Iteam No-6]**	Nos	1	218.40	218.40	ADD DISTRICT CHARGES
8	Supply of TMC501 conventional industrial batten **(Philips make)** LED Tube,model no- TMC501 P1xT-LED 22W P3241 **(WB I & WD schedule P-113, I- 5:3 F.22)**	Nos	4	~~473.55~~ 460.02	~~1894.20~~ 1840.08	ADD DISTRICT CHARGES
9	Fixing only single/twin fluroscent light fitting complete with all accessories directly on wall/ceiling by screws etc.. **[PWD Schedule Page No-C-2;Iteam No-14a]**	Nos	4	90.30	361.20	ADD DISTRICT CHARGES
10	Supply & fixing Bulk head light fittings with die cast aluminium housing frosted/clear glass on wall/ceiling incl S/F 9 watt LED Lamp complete set. **[Make - Havells]** **(PWD sch - Page--D-13, I-23)**	Nos	6	682.95	4097.70	ADD DISTRICT CHARGES
11	Supply & fixing smart bright street light complete with all accessories to be fixed from the wall of building or on pole incl. making holes /providing clamping arrangement & necy. GI reducer as required.S&F 40 mm GI Pipe 1.5 mtr average length & s&f necy length of 1.5 sqmm pvc insulated single core copper wire & making connections as required & mending good damages incl wall paingting. **(30 Watt)** **(Make - Bajaj)** **[WB I&WD sch P-111, I-f.9.0.2]**	Nos	1	3076.32 ~~3166.80~~	~~3166.80~~ 3076.32	ADD DISTRICT CHARGES
12	Supply of 9" domestic metal exhaust fan 9" (225mm)SWEEP. TRANS AIR - **(Make-Crompton/Havells/Bajaj)** **(UD & MA schedule P-14, I-5))**	Nos	4	1863.00	7452.00	NO DISTRICT CHARGES
13	Fixing only exhaust fan after making hole in wall and making good damages and smooth cement finish etc. as practicable as possible and providing necy. length of PVC insulated wire and making connection for exhaust of following diameter: 22.5 cm (9") **[PWD Schedule Page No-C-4;Iteam No-28(b)]**	Nos	4	259.35	1037.40	ADD DISTRICT CHARGES
14	Fixing only louver shutter/cowl on wall with necy. bolts & nuts (6 mm dia x 62 mm long) For 22.5 cm(9") Exhaust fan **[PWD Schedule Page No-C-4;Iteam No-30(b)]**	Nos	4	86.10	344.40	ADD DISTRICT CHARGES
15	Supply of 240V A.C Ceiling Fan (48" sweep,1200 mm complete) **[Make-Crompton** [for counter only] **(UD & MA schedule P- 23, I- 70)**	Each	1	2283.00	2283.00	NO DISTRICT CHARGES
16	Fixing only Ceiling Fan **[PWD sch P- C-3, I-21(a)]**	Each	1	69.30	69.30	ADD DISTRICT CHARGES

17	Supply & Fixing 240 V, 16/20 A Piano key type switch (Brand approved by EIC) on sheet metal switch board incl. S & F 100x100x65mm MS (16SWG) switch board and bakelite/perspex top cover of 3mm thick by Brass screws after making housing for switch by cutting bakelite/perspex cover and making necessary connections as required. (For Hand Dryer machine) **[PWD sch P- E-6, I-17(b)]**	Each	2	211.05	422.10	ADD DISTRICT CHARGES
18	S/F 240V 25A Modular type starter (brand approved by EIC)with 25 A. Modular switch DP MCB (C-Curve)and 4 Module G.I. Moduar type switch board with 4 Module Top Cover Plate flushed in wall incl. S/F switch board and Cover Plate and making necy. Connections with PVC Copper wire and earth connectivity wire etc. as per schedule **[for Pump] [PWD Schedule Page No-E-19, Item No-17] (Please follow in details)**	Nos	1	823.20	823.20	ADD DISTRICT CHARGES
19	Supply and Fixing of 2 mm Polyvinyl glow sign board made of 22 SWG GI sheet box with 1"X1" aluminum channel for fixing the vinyl board after necessary cutting the letter as required & s\f LED tube light fittings along with all accessories. (16 sqft @495.00/sqft) **(UD & MA schedule P-14, I-4)**	Nos	1	7920.00	7920.00	NO DISTRICT CHARGES
20	Earthing installation by GI earth Spike (1830 X 20 mm) including 8SWG GI EarthWire & GI nuts, bolts, washer etc.	Nos	1	450.00	450.00	NO DISTRICT CHARGES
			Total		48145.10	51213.50
			Add 18% GST		8666.12	9218.43
			Total With GST (A)		56811.22	60431.93
			Cess@1%		568.11	604.31
			Total		57379.33	61036.24
	Contingency Amount on "A"		Contingency@3%		568.11	1812.95
	(Total+GST)=Rs:		**Total**		57947.44	62849.19
			Say Rs.		57947.00	
	Service Connection Charges as per Quotation					

Say Rs. 62,849.00

10/10/2025

S. A. E.
Beldanga Municipality

Anuradha Banerjee
Chairperson
Beldanga Municipality

Technically Vetted Rs.: 62,849.00
(Rupees Sixty two thousand eight Hundred forty nine only.

Junior Engineer 18.11.25
Electrical & Mechanical Division
SUDA

18.11.25
ASSISTANT ENGINEER
ELECTRICAL & MECHANICAL DIVISION
SUDA

18/11/25
Executive Engineer (E/M)
O/O the Secretary M.E. Dte.
Government of West Bengal

MODLE DRAWING FOR CONSTRUCTION OF C. T./ P.T.
TOILET SEATS 4 Nos URINAL 5 Nos
MODLE NO.- G

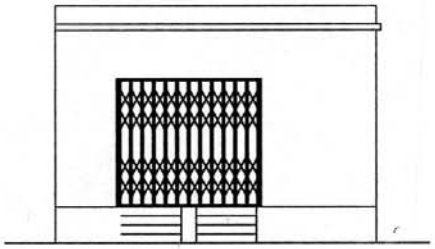

FRONT ELEVATION

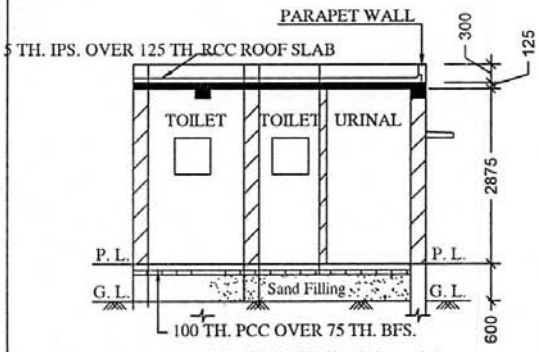

SECTION - `A - A'

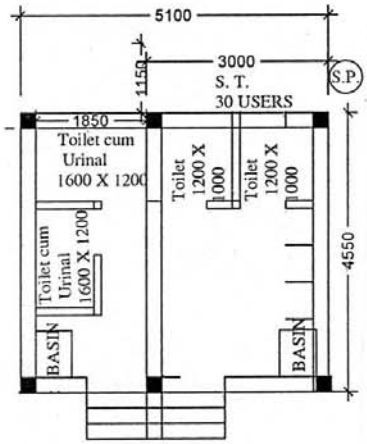

PLAN

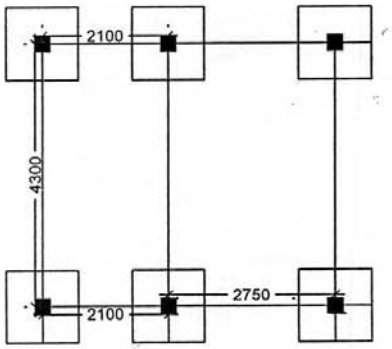

LAYOUT PLAN

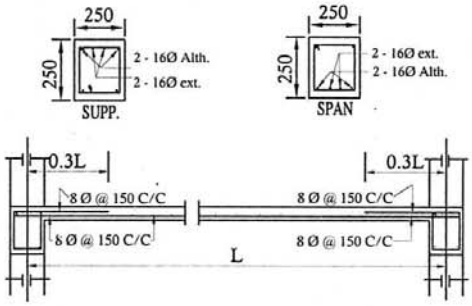

Details Of R.C.C Roof Slab & Beam
(SCALE - 1 : 25)

BHLP → 06
TL → 04
EF → 04
OL → 01
CF → 01
GSB → 01
17 PTS

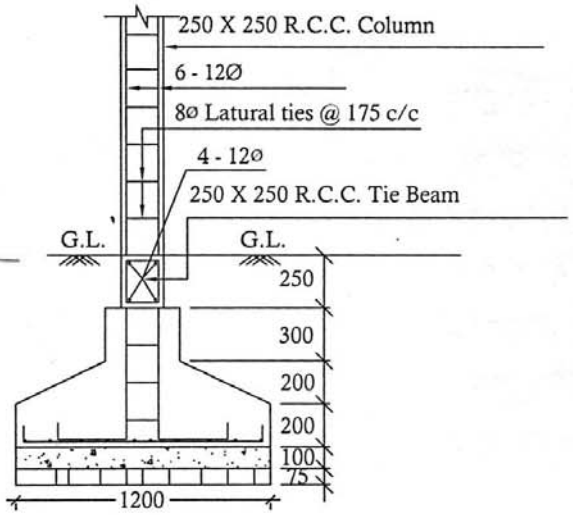

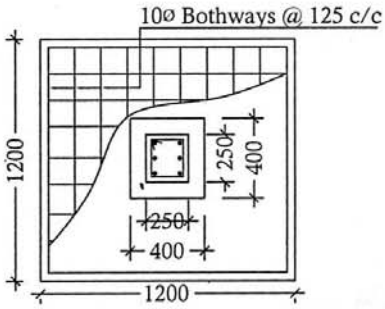

DETAILS OF R. C. C COLUMN
(SCALE - 1 : 25)

19/10/2025

S. A. E.
Baidanga Municipality