**BANKURA MUNICIPALITY**

**NAME OF WORK:- Construction work of Community Toilet at Chetkali Near Patakola Bridge within ward 23 as per Model Toilet Block - F under the jurisdiction of Bankura Municipality ELECTRICAL WORKS**

**TOILET SEATS - 2 NOS AND URINAL - 3 NOS**

**[ASPIRATIONAL PARAMETER]**

*** As per PWD & I & WD schedule district charges will be applicable on PWD & I & WD schedule items**

*** No district charges will be applicable on non-schedule items**

| Sl No. | Iteam Description | Unit | Quantity | Rate | Amount | Remarks |
|---|---|---|---|---|---|---|
| 1 | Distribution wiring in 1.1 KV grade 2x22/0.3 (1.5 sqmm) single core stranded 'FR' PVC insulated & unsheathed copper wire (Brand approved by EIC) in suitable size PVC ~~casing-capping~~ Rigid Conduit (Precision make) with 1x22/0.3 (1.5 sqmm) single core stranded 'FR' PVC insulated & unsheathed copper wire for ECC, incl. necy. PVC clips, fittings etc. to light/fan/call bell point with piano key type switch (Anchor make) fixed on sheet steel fabricated switch board with Perspex/bakelite top cover on wall incl. necy. connections and making earthing attachment and mending good damages to building works. [PVC ~~casing-capping~~ Rigid Conduit and Switch board both on surface] **(PWD sch P-E-1(4) I-2 a)** Average run 5 mtr | Point | ~~13~~ 11 | Rs. ~~605.85~~ 642.60 | Rs. ~~7,876.05~~ 7068.60 | District charges will be applicable for different districts on Rs. 577/- |
| 2 | Distribution Wiring in 1.1 KV grade 2x22/0.3 (1.5 sqmm) single core stranded 'FR' PVC insulated & unsheathed copper wire (Brand approved by EIC) in suitable size PVC ~~casing-capping~~ Rigid Conduit (Precision make) with 1x22/0.3 (1.5 sqmm) single core stranded 'FR' PVC insulated & unsheathed copper wire for ECC, incl. necy. PVC clips, fittings etc. to 5A 3 pin flush type plug socket with piano key type switch (Anchor make) fixed on sheet steel fabricated CRC MS switch board with bakelite/perspex (wall matching color) top cover of 3 mm thick flushed in wall by housing the board after cutting brick wall incl. necy. connection making earthing attachment, painting and mending good damages to building works [PVC ~~casing-capping~~ Rigid Conduit and plug box both on surface] **On Board (only for pay counter)** **(PWD Schedule Page No-E-1(3) I-6(a))** | Point | ~~13~~ 1 | Rs. 70.35 | Rs. ~~914.55~~ 70.35 | District charges will be applicable for different districts on Rs. 67/- |
| 3 | Supplying and fixing ~~Sheet steel Main Switches on flat iron frame on~~ wall 240V DP with fuse on L&N 32 A [**Make-~~Havells~~**] 30mA RCCB Complete Set (Legrand) **[PWD Schedule Page No-~~D-1 Iteam No-1(a)~~]** (ISI mark) 92) | Nos | 1 | 5942/- Rs. ~~1,340.85~~ | Rs. ~~1,340.85~~ 5942.00 | District charges will be applicable for different districts on Rs. ~~1277/-~~ |
| 4 | Wiring in 1.1 KV grade single core stranded 'FR' PVC insulated & unsheathed copper wire (Brand approved by EIC) of following sizes in 20mm PVC ~~casing-capping~~ (Precision make) incl. necy. PVC clips, fittings etc. 2 x 36/0.3 (2.5 sqmm) + 1 x 22/0.3 (1.5 sqmm) ECC **[PWD Schedule Page No-E-1(4) Iteam No-1(a)]** | mtr | ~~65~~ 14 | Rs. ~~107.10~~ 124.95 | Rs. ~~6,961.50~~ 1749.30 | District charges will be applicable for different districts on Rs. ~~102/-~~ |
| 5 | Supplying and fixing MCB SS enclosure with IP-20/30 protection, powder coated provision for two/four pole MCB, concealed in wall after cutting the wall & mending good the damages to original finish incl. painting, connection & provision for earthing attachment ~~(4~~ (2+4) way MCB enclosure) incl 240V 40A DP MCB Isulator (Havells) **[PWD SCH P-D.9 Item-11]** (PWD - D/6, I/6) | No | 1 ~~2~~ | (935+208) =1143+57 Rs. ~~331.80~~ =1200.15 | 1200.15 Rs. ~~663.60~~ | District charges will be applicable for different districts on Rs. ~~316/-~~ |
| 6 | Supplying and fixing 240/415 V MCB of Breaking capacity 10kA & C characteristics on din rail of existing DBs and necessary connection 6-32A SP MCB (**Make -Havells**) **[PWD Schedule Page No-D-6:Iteam No-7]** | Nos | 4 ~~3~~ | Rs. 176.40 | 705.60 Rs. ~~529.20~~ | District charges will be applicable for different districts on Rs. 168/- |

| Sl No. | Iteam Description | Unit | Quantity | Rate | Amount | Remarks |
|---|---|---|---|---|---|---|
| 7 | Supply of TMC501 conventional industrial batten philips LED Tube,model no- TMC501 P1xT-LED 22W P3241 **(WB I & WD schedule P-113, I- 5:3 F.22)** | Nos | ~~3~~ 2 | Rs. ~~473.55~~ 460.02 | Rs. ~~1,420.65~~ 920.04 | District charges will be applicable for different districts on Rs. 451/- |
| 8 | Fixing only single/twin fluroscent light fitting complete with all accessories directly on wall/ceiling by screws etc.. **[PWD Schedule Page No-C-2;Iteam No-14a]** | Nos | ~~3~~ 2 | Rs. 90.30 | Rs. ~~270.90~~ 180.60 | District charges will be applicable for different districts on Rs. 86/- |
| 9 | Supply & fixing Bulk head light fittings with die cast aluminium housing frosted/clear glass on wall/ceiling incl S/F 9 watt LED Lamp complete set. **[Make - Havells] (PWD sch - Page--D-13, I-23)** | Nos | ~~2~~ 3 | Rs. ~~597.45~~ 672.45 | Rs. ~~1,194.90~~ 2017.35 | District charges will be applicable for different districts on Rs. 569/- |
| 10 | Supply & fixing smart bright street light complete with all accessories to be fixed from the wall of building or on pole incl. making holes /providing clamping arrangement & necy. GI reducer as required.S&F 40 mm GI Pipe 1.5 mtr average length & s&f necy length of 1.5 sqmm pvc insulated single core copper wire & making connections as required & mending good damages incl wall paingting. (30 Watt) **(Make - Bajaj)** **[WB I & WD sch P-113, I-50.0.2]** | Nos | 1 | Rs. ~~3,166.80~~ 3076.32 | Rs. ~~3,166.80~~ 3076.32 | District charges will be applicable for different districts on Rs. 3016/- |
| 11 | Supply of ~~12"~~ domestic metal exhaust fan 230V 50 Hz (Model- Trans Air ~~12"~~ Grey) ( **Make- Crompton/Havells/Bajaj**) (9") **(UD & MA schedule P-14, I-5))** | Nos | ~~5~~ 3 | Rs. ~~2,093.00~~ 1863/- | Rs. ~~10,465.00~~ 5589.00 | No district charges |
| 12 | Fixing only exhaust fan after making hole in wall and making good damages and smooth cement finish etc. as practicable as possible and providing necy. length of PVC insulated wire and making connection for exhaust of following diameter: ~~30 cm (12"~~) (9") **[PWD Schedule Page No-C-4;Iteam No-28(b)]** | Nos | ~~5~~ 3 | 259.35 Rs. ~~345.45~~ | Rs. ~~1,727.25~~ 778.05 | District charges will be applicable for different districts on Rs. 329/- |
| 13 | Fixing only louver shutter/cowl on wall with necy. bolts & nuts (6 mm dia x 62 mm long) (9") For ~~30 cm(12"~~) Exhaust fan **[PWD Schedule Page No-C-4;Iteam No-28(b)]** | Nos | ~~5~~ 3 | Rs. ~~115.50~~ 86.10 | Rs. ~~577.50~~ 258.30 | District charges will be applicable for different districts on Rs. 110/- |
| 14 | S/F 240V 25A Modular type starter (brand approved by EIC)with 25 A. Modular switch DP MCB (C-Curve)and 4 Module G.I. Moduar type switch board with 4 Module Top Cover Plate flushed in wall incl. S/F switch board and Cover Plate and making necy. Connections with PVC Copper wire and earth connectivity wire etc. as per schedule **[for Pump] [PWD Schedule Page No-E-19, Item No-17] (Please follow in details)** | Nos | ~~2~~ 1 | Rs. 823.20 | Rs. ~~1,646.40~~ 823.20 | District charges will be applicable for different districts on Rs. 784/- |
| 15 | Supply of 240V A.C Ceiling Fan ( 48" sweep complete) **[Make-Crompton** [ for counter only] (1200 mm) **(UD & MA schedule P- 23, I- 70)** | Each | ~~2~~ 1 | Rs. 2,283.00 | Rs. ~~4,566.00~~ 2283.00 | No district charges |
| 16 | Fixing only Ceiling Fan **[PWD sch P- C-3, I-21(a)]** | Each | ~~2~~ 1 | Rs. 69.30 | Rs. ~~138.60~~ 69.30 | District charges will be applicable for different districts on Rs. 66/- |
| 17 | Supply & Fixing 240 V, 20 A Piano key type switch (Brand approved by EIC) on sheet metal switch board incl. S & F 100x100x65mm MS (16SWG) switch board and bakelite/perspex top cover of 3mm thick by Brass screws after making housing for switch by cutting bakelite/perspex cover and making necessary connections as required **[PWD sch P- E-6, I-17(b)]** | Each | 2 | Rs. 211.00 | Rs. 422.00 | District charges will be applicable for different districts on Rs. 201/- |

| Sl No. | Iteam Description | Unit | Quantity | Rate | Amount | Remarks |
|---|---|---|---|---|---|---|
| 18 | Supply and Fixing of 2 mm Polyvinyl glow sign board made of 22 SWG GI sheet box with 1"X1" aluminum channel for fixing the vinyl board after necessary cutting the letter as required & s\f LED tube light fittings along with all accessories. (16 sqft @495.00/sqft) **(UD & MA schedule P-14, I-4)** | Nos | 1 | Rs. 7,920.00 | Rs. 7,920.00 | No district charges |
| 19 | Earthing installation by GI earth Spike (1830 X 20 mm) including 8SWG GI EarthWire & GI nuts, bolts, washer etc. | Nos | 1 | Rs. 450.00 | Rs. 450.00 | No district charges |
| | | | Total | | Rs. 52,251.75 | 41538.01 |
| | | | Add 18% GST | | Rs. 9,405.32 | 7476.84 |
| | | | Total With GST (A) | | Rs. 61,657.07 | 49014.85 |
| | | | Cess@1% | | Rs. 616.57 | 490.14 |
| | | | total | | Rs. 62,273.64 | 49505.00 |
| | Contingency Amount on "A" | | Contingency@3% | | Rs. 1,849.71 | 1470.44 |
| | (Total+GST)=Rs: | | **Total** | | Rs. 64,123.35 | 50975.44 |
| | | | **Say** | **Total =** | Rs. 64,123.00 | + |
| | ***(if require)** (+) **Service Connection Charges** | | | **Rs. 5000.00** | Rs. 5,000.00 | 5000.00 |
| | | | **Grand Total** | | Rs. ~~69,123.00~~ | 55975.44 |
| | (~~Rupees Sixty Nine Thousand One Hundred Twenty Three Only~~) | | | | | |

30/12/24
S.A.E.
Bankura Municipality

Say Rs. 55,975.00

30/12/24
Chairperson
Bankura Municipality

Technically Vetted Rs. 55,975/-
(Rupees Fifty five thousand nine hundred Seventy five)

22.01.25
Junior Engineer
Electrical & Mechanical Division
SUDA

22/1/25
Executive Engineer (E/M)
O/O the Secretary M.E. Dte.
Government of West Bengal

22.1.25
ASSISTANT ENGINEER
ELECTRICAL & MECHANICAL DIVISION
SUDA

# MODLE DRAWING FOR CONSTRUCTION OF C. T./ P.T. TOILET SEATS 2 NOS URINAL 3 NOS
## MODLE NO.- F

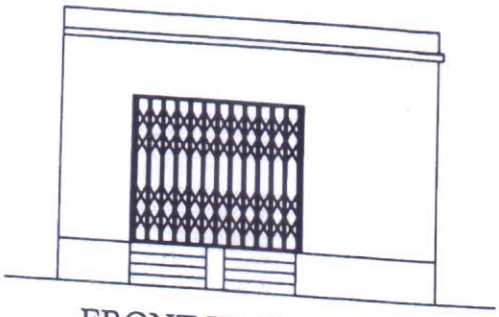

FRONT ELEVATION

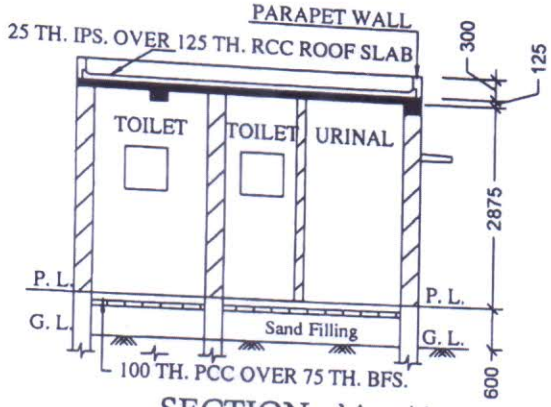


SECTION - `A - A'

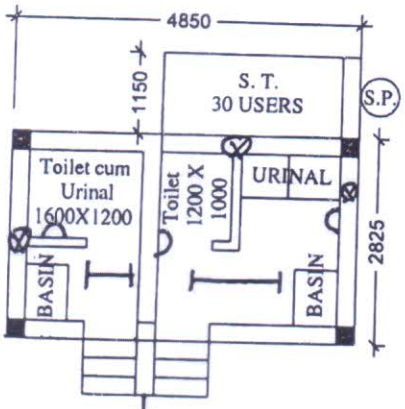


PLAN

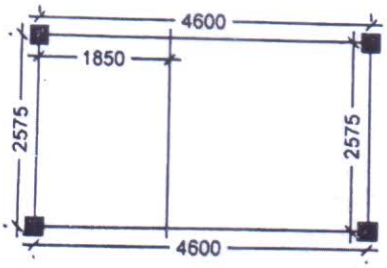


LAYOUT PLAN

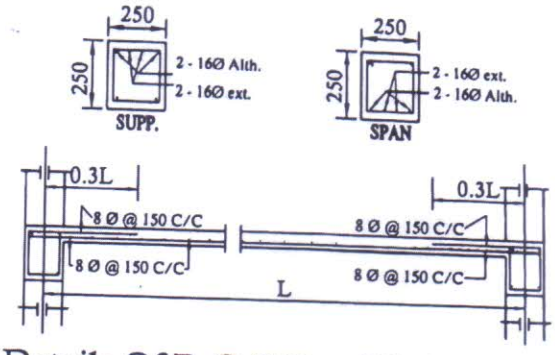


Details Of R.C.C Roof Slab & Beam

(SCALE - 1 : 25)

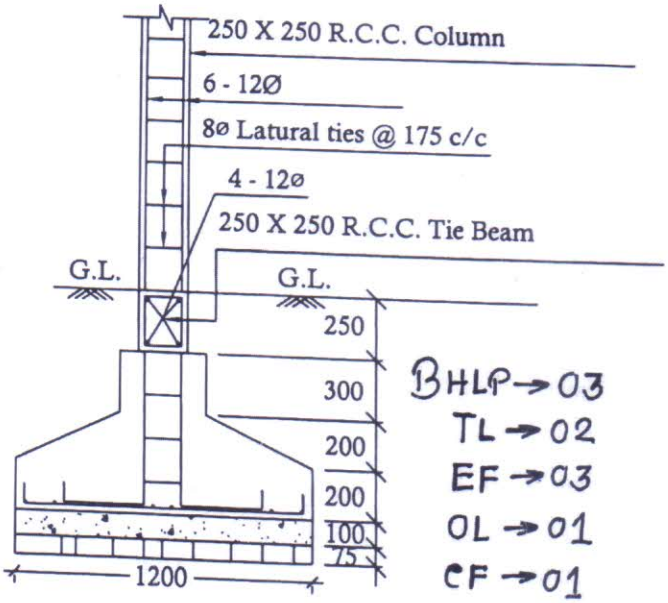


BHLP → 03
TL → 02
EF → 03
OL → 01
CF → 01
GSB → 01
11 pts

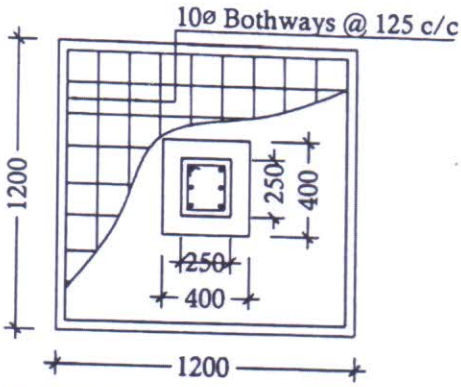


DETAILS OF R. C. C COLUMN

(SCALE - 1 : 25)

27/12/24
S.A.E.
Bankura Municipality

27/12/24
Chairperson
Bankura Municipality